Received: 26 June 2021 | Revised: 12 January 2022 | Accepted: 1 February 2022

DOI: 10.1049/qtc2.12035

IET Quantum Communication

The Institution of Engineering and Technology WILEY

ORIGINAL RESEARCH

A new online testing technique for reversible circuits

Joyati Mondal[1] | Debesh Kumar Das[2]

[1]AKCSIT, Calcutta University, Kolkata, West Bengal, India

[2]Department of Computer Science Engineering, Jadavpur University, Kolkata, West Bengal, India

Correspondence

Joyati Mondal, AKCSIT, Calcutta University, JD-2, sector-3, Salt Lake city, Kolkata, West Bengal, India.
Email: joyatimondal14@gmail.com

Abstract

Any technology offering zero power dissipation must be reversible. A reversible circuit can be envisaged as a cascade of reversible gates only, such as Toffoli gate, which has two components: k control bits and a target bit (k-CNOT), $k \geq 1$. Analysing testability issues in a reversible circuit is an important phenomenon. A new online design-for-testability (DFT) technique for reversible circuits is proposed. The authors' method yields less overhead in terms of quantum cost as compared to the previous online approaches.

KEYWORDS

quantum computing, quantum gates

1 | INTRODUCTION

Rising concerns for energy loss have become a fundamental problem in modern nano-scale Complementary metal oxide Semiconductor logic circuits. According to Landauer's principle [1], a non-reversible circuit causes irreversibility of information processing with which, energy loss is associated. Reversible logic, on the other hand, provides a mechanism for designing information lossless circuits and may provide a solution to energy reduction for futuristic technology [1–3]. It also provides a foundation for designing quantum computers [4, 5].

Classical logic gates such as AND, OR, NAND, NOR, or XOR used in digital design are not reversible, and hence they cannot be used to design reversible circuits. In order to design reversible circuits, only reversible gates can be used such as controlled-not (CNOT) gate proposed by Feynman [6], Toffoli [7], or Fredkin [8] gates, among others.

Several researchers [9–12] have studied the problem of fault modelling and testing of reversible logic circuits. While the stuck-at fault model is widely used for conventional logic circuits, newer models such as single missing-gate fault (SMGF), repeated-gate fault (RGF), partial missing-gate fault (PMGF), or multiple missing-gate fault (MMGF), have been found to be more suitable for representing physical failures or defects in reversible circuits implemented with quantum technologies [9, 11, 12]. We follow the fault models as described in the literature as fruitful to capture physical defects in quantum reversible circuits [4, 9, 11, 13]. Based on these models, several test strategies are described in the existing literature [13–34]. However, with changing technology, these fault models are likely to be changed. Online testing techniques are described in Ref. [14, 20, 22, 23, 25–27, 29, 30, 35]. Another approach in testing reversible circuits is to use the Clifford + T gates, which are themselves fault tolerant [36, 37].

We propose a method of online testing technique for reversible circuits. We have compared the proposed technique with some earlier studies on online testing [15, 22] and have shown that our work outperforms the existing techniques with respect to quantum cost overhead for a number of benchmark reversible circuits. We also make the comparison in a very recent work of design for testability [16] and establish the supremacy of our work.

The paper is organised as follows. Section 2 presents the basic definitions, fault models etc. associated with reversible logic. Section 3 describes our proposed modified design. Section 4 depicts the experimental results and comparison, and Section 5 contains the conclusion.

2 | PRELIMINARIES

2.1 | Reversible logic

A Boolean function is reversible if there exists a bijective mapping between inputs and outputs. In a reversible

This is an open access article under the terms of the Creative Commons Attribution License, which permits use, distribution and reproduction in any medium, provided the original work is properly cited.

© 2022 The Authors. *IET Quantum Communication* published by John Wiley & Sons Ltd on behalf of The Institution of Engineering and Technology.

function, the input can be produced back from the output. In others words, the output pattern has to be a permutation of the input pattern. To satisfy all these characteristics, the number of output lines should be equal to the number of input lines.

2.2 | Reversible gates

The basic CNOT-type reversible gates used for synthesis are the following:

(i) $(1 \times 1) NOT\,(x_1 \rightarrow x_1')$
(ii) (2×2) controlled NOT (CNOT): $(x_1, x_2) \rightarrow (x_1, x_1 \oplus x_2)$
(iii) (3×3) Toffoli gate $(x_1, x_2, x_3) \rightarrow (x_1, x_2, x_1x_2 \oplus x_3)$.

The standard graphic symbol for the above mentioned three gates are shown in Figure 1. A generalised Toffoli gate, also known as Multiple Control Toffoli (MCT) gate [8], has a set of control inputs C, a target input set T, and can be describe $TOF(C;T)$, where $C = (x_{i1}, x_{i2}, \ldots, x_{ik})$, $T = \{x_j\}$ and $C \cap T = \phi$. It maps an input vector $(x_1^0, x_2^0, \ldots, x_n^0)$ to $(x_1^0, x_2^0, \ldots, x_{j-1}^0, x_j^0 \oplus (x_{i1}^0.x_{i2}^0 \ldots .. x_{ik}^0), x_{j+1}^0, \ldots, x_n^0)$. Thus, a NOT gate is $TOF(x_j)$, that is, a generalised Toffoli gate, which has no controls as shown in Figure 1a. The CNOT gate is $TOF(x_i, x_j)$, that is, a generalised Toffoli gate with one control bit [6] as shown in Figure 1b; this is also known as Feynman gate. The simple (3×3) Toffoli gate is a generalised Toffoli gate with two controls [6] as shown in Figure 1c. A k-CNOT gate has k control inputs $x_1, x_2, \ldots, x_k$ and one target input t. It maps the input vector $(x_1, x_2, \ldots, x_k, t)$ to the output vector $(x_1, x_2, \ldots, x_k, t \oplus x_1.x_2 \ldots x_k)$.

2.3 | Quantum cost analysis

The quantum cost of a gate G is the number of elementary quantum operations required to realise the function given by G. Table 1 shows the required quantum cost $Q_c(k)$ in the realisation of MCT gate with k controls [38]. An MCT gate with $(k + 1)$ lines has k control lines.

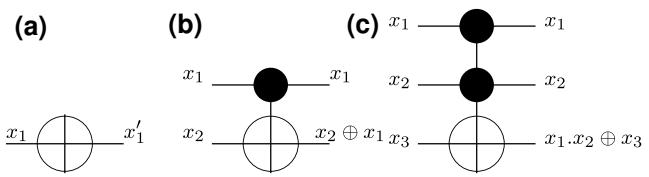

FIGURE 1 Three basic reversible gates. (a) NOT; (b) CNOT; (c) T offoli

TABLE 1 Quantum cost of Toffoli gate with n control lines

# controls	0	1	2	3	4	5	6	7	8
Quantum cost ($Q_c(k)$)	1	1	5	14	20	32	44	64	76

2.4 | Reversible logic circuit

A reversible logic circuit RC of size n with depth d is a cascade of d reversible gates over the set of input lines $X = \{x_1, x_2, \ldots, x_n\}$, that is $RC = g_0 \cdot g_1 \cdot g_2 \cdots g_{d-1}$, where each g_i represents ith reversible gate of the circuit RC.

A logic circuit is said to be reversible if it is fan-out free, acyclic, and consists of only reversible gates, which themselves implement reversible functions; such gates need to be specially designed, for example, Toffoli gates. An example of a reversible logic circuit is shown in Figure 2. The quantum cost of a reversible logic circuit is the summation of the quantum cost of all the reversible gates in the circuit.

2.5 | Garbage

A garbage output of a reversible circuit is an output, whose functionality is not a part of design specification. The garbage outputs are the extra outputs those are required to realise the given function and to ensure reversibility.

2.6 | Fault model

A fault is a physical defect in a system. A system has a fault if there is a physical difference between the correct system and the current system. A fault model simplifies the analysis and complexity of testing by reducing the number of faults in a circuit. A good fault model should be technology-independent and computationally tractable. We give a brief description of the different fault models, which is applicable to quantum reversible circuits.

2.6.1 | Stuck-at-fault

A *stuck-at fault* model [9] is a fault in which a line in the circuit is permanently set to value 0 or 1. Under the stuck-at fault model, we have 2 faults, stuck-at-0 fault and stuck-at-1 fault. In *stuck-at-0* fault, a line is set to permanent value 0. A stuck-at-0 fault is detected by a test, which produces 1 at the faulty line. In *stuck-at-1* fault, a line is set to permanent value 1. A stuck-at-1 fault is detected by a test, which produces 0 at the faulty line.

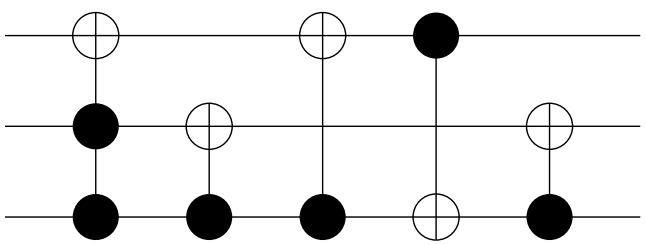

FIGURE 2 A reversible circuit

26328925, 2022, 1, Downloaded from https://ietresearch.onlinelibrary.wiley.com/doi/10.1049/qtc2.12035 by S.V. National Institute of Technology, Surat, Wiley Online Library on [02/06/2025]. See the Terms and Conditions (https://onlinelibrary.wiley.com/terms-and-conditions) on Wiley Online Library for rules of use; OA articles are governed by the applicable Creative Commons License

2.6.2 | Bridging fault

This category of fault arises when two or more adjacent wires of a circuit get physically come in contact or linked and resemble the abilities of wired AND or OR interconnections that consequence into erroneous functionality.

These faults may occur on a couple of wires or on multiple wires at respective levels of the circuit, which are termed as single intra-level and multiple intra-level bridging faults.

2.6.3 | Cell faults

Any inappropriate operation of a gate in a circuit, which results in an incorrect output is termed as cell faults. Here, the gates are referred to as a cell.

2.6.4 | Bit fault model

In this fault model, a fault is indicated by a change in the value of one or more bits on a line [13].

2.6.5 | Crosspoint fault model

Crosspoint faults [13] in reversible logic circuits can be classified into two groups: disappearance faults and appearance faults.

In disappearance fault, one or more of the control points in a Toffoli gate are missing. The disappearance fault model happens to be same as the PMGF model introduced earlier.

Similarly, an appearance fault occurs when one or more extra control points are added to a Toffoli gate. The fault is detectable if at least one of the extra control points have logic 0 while the other control points are logic 1.

2.6.6 | Missing gate fault model

Missing-gate fault is a widely accepted model in analysing failure in reversible circuits [9]. A *SMGF* is the removal of one k-CNOT gate from the circuit. The *RGF* model occurs when a gate is replaced by several instances of the same gate in the circuit. The *multiple missing-gate fault* (MMGF) model is the disappearance of a set of consecutive gates from the circuit. A *PMGF* is the disappearance of m of k controls in a k-CNOT gate, thus transforming it into a $(k - m)$-CNOT gate.

3 | PROPOSED DESIGN

Let us consider that there exist N gates $G_1, G_2, \ldots, G_N$ in a $(n + 1) \times (n + 1)$ reversible circuit. As given in Ref. [14], to achieve the testable design, with the original circuit we append some additional gates with targets connected to an additional line. This additional line C_1 is always kept at value 0. To describe the additional gates, we first define two modules of gates, which are used in the proposed design, Module1(G) and Module2(G_1, G_2). Let the output value at the target line T of a gate $G = TOF(C, T)$ with set of control inputs C is represented by $V(G)$. Module1(G) defined on gate G inserts two 1 CNOT gates before and after G as shown in Figure 3.

Clearly Module1 produces the following output.

The first gate produces at C_1: $V(G^1)$ = Input to Target of $G \oplus C_1$.

G produces at x_n: $V(G)$ = Input to Target of $G \oplus x_m.x_{m+1}\ldots x_n$

The second gate produces at C_1: $V(G^2) = V(G_1) \oplus V(G) = C_1 \oplus x_m.x_{m+1}\ldots x_n$

Module2(G_1, G_2) is defined on two gates, where the control lines of G_1 and G_2 differ on only one line and the minimum number of controls in G_1 or G_2 is 2. Let G_1 has less controls than G_2. There can be two cases as shown in Figure 4a (G_1 appears before G_2) and 4b (G_1 appears before

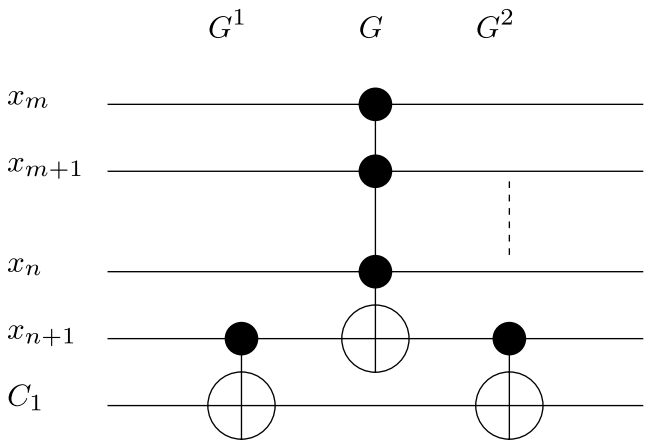

FIGURE 3 The additional gates of Module 1

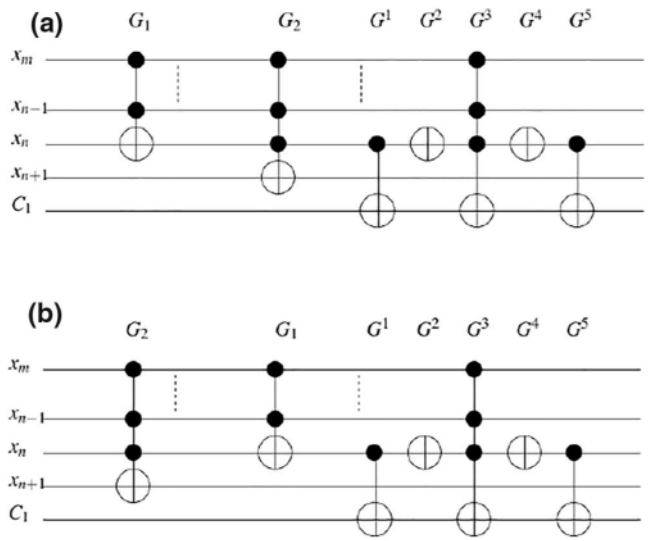

FIGURE 4 The additional gates of Module 2 G1 and G2 are two gates with a specific configuration. (a) and (b) shows the different arrangement of G1 and G2

26328925, 2022, 1, Downloaded from https://ietresearch.onlinelibrary.wiley.com/doi/10.1049/qtc2.12035 by S.V. National Institute of Technology, Surat, Wiley Online Library on [02/06/2025]. See the Terms and Conditions (https://onlinelibrary.wiley.com/terms-and-conditions) on Wiley Online Library for rules of use; OA articles are governed by the applicable Creative Commons License

G_2). The additional quantum cost of Module2(G_1, G_2) is 4 + Quantum cost of the bigger gate between G_1 and G_2.

Notice that the two additional gates of Module1(G) are placed before and after gate G whereas the additional gates of Module2(G_i, G_j) are appended after the gates G_1 and G_2.

Clearly the additional gates of Module2(G_1, G_2) produce the following output.

Gate G^1 produces at C_1: $V(G^1) = V(G_1) \oplus C_1$.

Gate G^2 produces at C_1: $V(G^2) = V'(G_1)$.

Gate G^3 produces at C_1: $V(G^3) = V(G^1) \oplus x_m.x_{m+1}\ldots x_{n-1}.V(G^2)$.

Gate G^4 produces at C_1: $V(G^4) = V(G_1)$.

Gate G^5 produces at C_1: $V(G^5) = V(G^3) \oplus V(G^4)$.

Thus, after the fifth gate $V(G_5) = V(G^3) \oplus V(G^4)$.

$= V(G^1) \oplus x_m.x_{m+1}\ldots x_{n-1}.V(G^2) \oplus V(G_1)$.

$= V(G_1) \oplus C_1 \oplus x_m.x_{m+1}\ldots x_{n-1}.V'(G_i) \oplus V(G_1)$.

$= C_1 \oplus x_m.x_{m+1}\ldots x_{n-1}.V'(G_1)$.

Also notice that after the use of Module1(G) and Module2 (G_1, G_2), only the output of the line C_1 changes; the values at other lines remain unchanged.

In Ref. [14] for each gate, some additional gates are appended to achieve online testing. In our design, instead of a single gate, we append some additional gates for a pair of gates. We seek such pairs of gates in the circuit for which some additional gates can be appended. Choosing of such a pair of gates depends on some criterion. If no such pair satisfying this criterion exists, we follow the method in Ref. [14].

We scan the circuit from left to right. For each gate G_i represented by TOF(C_i, T_i), we try to find another gate G_j ($j > i$) represented by TOF(C_j, T_j) such that there exists no gate G_k ($i < k < j$) represented by TOF(C_k, T_k) and $T_k \in C_i \cup C_j$. The situation may be as shown in Figure 5.

We check whether the following cases arise between G_i and G_j and append some additional gates using a required algorithm for each case to achieve the online testability:

Case 1 When G_i and G_j satisfies either of the following conditions,

1.1 $C_j = C_i \cup T_i$ and $C_i >= 2$

1.2 $C_i \in C_j$ and $|C_i| = |C_j| + 1$ and $T_i \neq T_j$ and $C_i >= 2$

The additional gates with G_i and G_j are determined by Algorithm 1:

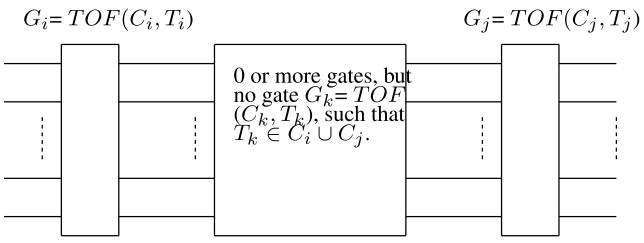

FIGURE 5 Chosen pair of gates, G_i and G_j

Algorithm 1 Case1(G_i, G_j)

Input: Gate G_i (TOF(C_i, T_i)), such that $C_j = C_i \cup T_i$ [G_j**(TOF**(C_j, T_j)), **such that** $|C_i| = |C_j| + 1$ **and** $T_i \neq T_j$]

Output: Addition of gates in the original circuit.

BEGIN

1. Insert Module1(G_i)
2. Insert Module1(G_j)
3. Insert Module2(G_i, G_j) [Module2(G_j, G_i)]

END

Examples of the pair of gates G_i and G_j satisfying Condition 1.1 and 1.2 of Case 1 with the proposed additional circuitry are shown in Figure 6a,b. The total quantum cost of the additional gates is 8 + Quantum Cost of G^7.

Lemma 1 *In case-1, the additional gates as described by Algorithm 1 produce 0 at no fault in the circuit.*

Proof.:

For Case 1.1[1.2]

Module1(G_i) produces: $V(G^2) = C_1 \oplus x_m.x_{m+1}....x_{n-1}$ $[C_1 \oplus x_m....x_{n-1}]$

Module1(G_j) produces: $V(G^4) = V(G^2) \oplus x_m.x_{m+1}....x_{n-1}.V(G_i)$ $[V(G^2) \oplus + x_{m+1}....x_{n-1}]$

$= C_1 \oplus x_m.x_{m+1}....x_{n-1} \oplus x_m.x_{m+1}....x_{n-1}.V(G_i)[C_1 \oplus x_m.x_{m+1}....x_{n-1} \oplus x_{m+1}....x_{n-1}]$

$= C_1 \oplus x_m.x_{m+1}\ldots x_{n-1}.V'(G_i)\left[C_1 \oplus x'_m\ldots x_{n-1} \oplus x_{m+1}\ \ldots x_{n-1}\right]$

Module2(G_i, G_j) [Module2(G_j, G_i)] produces:

$V(G^4) \oplus x_m.x_{m+1}\ldots x_{n-1}.V'(G_i)\left[V(G^4) \oplus x'_m.x_{m+1}\ldots x_{n-1}\right]$

$= C_1 \oplus x_m.x_{m+1}\ldots x_{n-1}.V'(G_i) \oplus x_m.x_{m+1}\ldots x_{n-1}.V'(G_i)\left[C_1 \oplus x_m\ldots x_{n-1} \oplus x'_m.x_{m+1}\ldots x_{n-1}\right]$

$= C_1$

Hence the proof. □

Case 2 $C_i = C_j \cup T_j$ and $C_j >\ = 2$

The additional gates with G_i and G_j are determined by Algorithm 2:

Algorithm 2 Case2(G_i, G_j)

Input: Gate G_i **(TOF**(C_i, T_i)) **and** G_j **(TOF**(C_j, T_j)) **such that** $C_i = C_j \cup T_j$

Output: Addition of gates in the original circuit.

BEGIN

1. Insert Module1(G^i)
2. Insert Module1(G^j)
3. Insert $G^5 = TOF(x_m, x_{m+1}, \ldots, x_n, C_1)$ after gate G^4

END

26328925, 2022, 1, Downloaded from https://ietresearch.onlinelibrary.wiley.com/doi/10.1049/qtc2.12035 by S.V. National Institute of Technology, Surat, Wiley Online Library on [02/06/2025]. See the Terms and Conditions (https://onlinelibrary.wiley.com/terms-and-conditions) on Wiley Online Library for rules of use; OA articles are governed by the applicable Creative Commons License

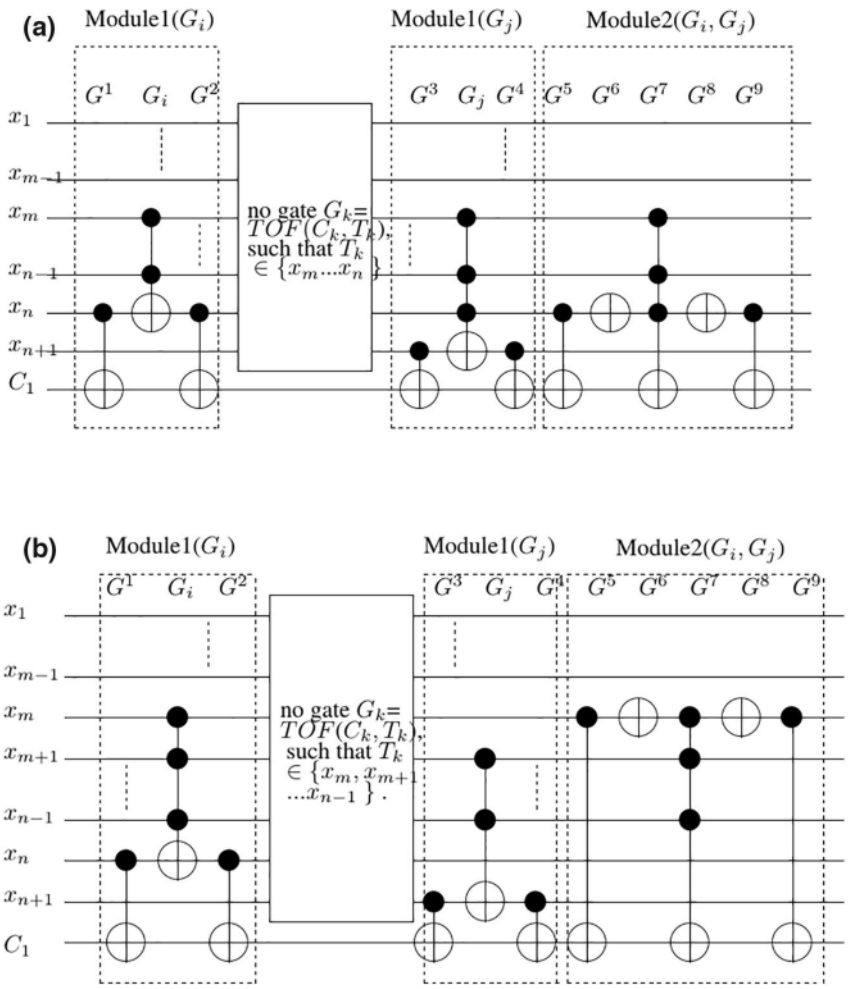

FIGURE 6 Case 1 contains two different scenerio (a) and (b) described in the algorithm

An example of the pair of gates G_i and G_j satisfying Case 2 with the proposed additional circuitry is shown in Figure 7. The total quantum cost of the additional gates is 4 + Quantum Cost of G^5.

Lemma 2 *In case-2, the additional gates as described by Algorithm 2 produce 0 at no fault in the circuit.*

Proof:
Module1(G_i) produces: $V(G^2) = C_1 \oplus x_m.x_{m+1}....x_{n-1}.x_n$
Module1(G_j) produces: $V(G^4) = V(G^2) \oplus x_m.x_{m+1}....x_{n-1}$
$= C_1 \oplus x_m.x_{m+1}....x_{n-1}.x_n \oplus x_m.x_{m+1}....x_{n-1}$
$= C_1 \oplus x_m.x_{m+1}....x_{n-1}.x'_n$
G^5 produces at C_1: $V(G^4) \oplus x_m.x_{m+1}....x_{n-1}.V(G_j)$.
$= C_1 \oplus x_m.x_{m+1}....x_{n-1}.x'_n \oplus x_m.x_{m+1}....x_{n-1}.V(G_j)$.
$= C_1 \oplus x_m.x_{m+1}....x_{n-1}.x_n \oplus x_m.x_{m+1}....x_{n-1}.(x_m.x_{m+1}....x_{n-1} \oplus x_n)$.
$= C_1 \oplus x_m.x_{m+1}....x_{n-1}.x'_n \oplus x_m.x_{m+1}....x_{n-1}.x'_n$.
$= C_1$
Hence the proof. □

Case 3 $C_i \in C_j$ and $|C_i| = |C_j| + 1$ and $T_i = T_j$ and $C_i > = 2$

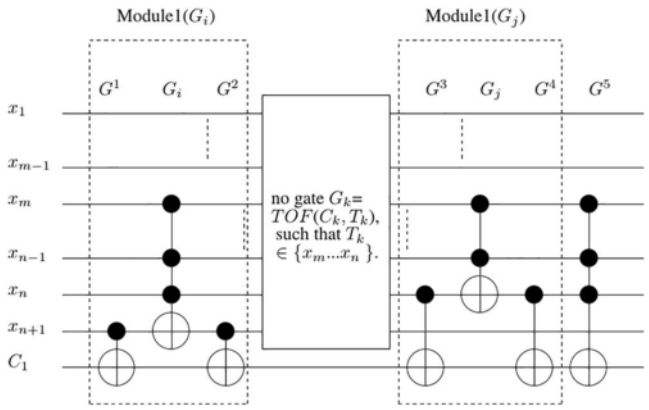

FIGURE 7 *Case 2*

The additional gates with G_i and G_j are determined by Algorithm 3:

Algorithm 3 Case3(G_i, G_j)

Input: Gate G_i **(TOF(**C_i, T_i**)) and** G_j **(TOF(**C_j, T_j**)) such that** $C_i \in C_j$ **&** $|C_i| = |C_j| + 1$ **&** $T_i = T_j$
Output: Addition of gates in the original circuit.

26328925, 2022, 1, Downloaded from https://ietresearch.onlinelibrary.wiley.com/doi/10.1049/qtc2.12035 by S.V. National Institute of Technology, Surat, Wiley Online Library on [02/06/2025]. See the Terms and Conditions (https://onlinelibrary.wiley.com/terms-and-conditions) on Wiley Online Library for rules of use; OA articles are governed by the applicable Creative Commons License

BEGIN
1. Insert $G^1 = TOF(x_k, C_1)$ as G^1, before gate G_i
2. Insert $G^2 = TOF(x_k, C_1)$ after gate G_j
3. Insert Module2(G_i, G_j)
END

An example of the pair of gates G_i and G_j satisfying Case 3 with the proposed additional circuitry is shown in Figure 8. The total quantum cost of the additional gates is 6 + Quantum Cost of G^7.

Lemma 3 *In case-3, the additional gates as described by Algorithm 3 produce 0 at no fault in the circuit.*

Proof.:
G^1 produces at C_1: $V(G^1) = C_1 \oplus x_{n+1}$.
G_i produces at x_{n+1}: $V(G_i) = x_{n+1} \oplus x_m.x_{m+1}....x_n$.
G_j produces at x_{n+1}: $V(G_j) = V(G_i) \oplus x_{m+1}....x_n$.
G^2 produces at C_1: $V(G^2) = V(G^1) \oplus V(G_j)$.
Module2(G_i, G_j) produces: $V(G^2) \oplus x'_m.x_{m+1}....x_{n-1}.x_n$
$= V(G^1) \oplus V(G_j) \oplus x'_m.x_{m+1}....x_{n-1}.x_n$
$= C_1 \oplus x_{n+1} \oplus V(G_i) \oplus x_{m+1}....x_n \oplus x'_m.x_{m+1}....x_{n-1}.x_n$
$= C_1 \oplus x_{n+1} \oplus x_{n+1} \oplus x_m.x_{m+1}....x_n \oplus x_{m+1}....x_n \oplus x'_m.x_{m+1}....x_{n-1}.x_n$
$= C_1$
Hence the Proof. □

Case 4 $C_i = C_j$.

The additional gates with G_i and G_j are determined by *Algorithm* 4:

Algorithm 4 Case4(G_i, G_j)

Input: Gate G_i (TOF(C_i, T_i)) and G_j (TOF(C_j, T_j)) **such that** $C_i = C_j$
Output: Addition of gates in the original circuit.
BEGIN
1. Insert Module1(G^i)
2. Insert Module1(G^j)
END

An example of the pair of gates G_i and G_j satisfying Case 4 with the proposed additional circuitry is shown in Figure 9. The total quantum cost of the additional gates is 4.

Lemma 4 *In case-4, the additional gates as described by Algorithm 4 produce 0 at no fault in the circuit.*

Proof.:
Module1(G_i) produces at C_1: $V(G^2) = C_1 \oplus x_m.x_{m+1}....x_{n-1}$.
Module1(G_j) produces at C_1: $V(G^4) = V(G^2) \oplus x_m.x_{m+1}....x_{n-1}$.
$= C_1 \oplus x_m.x_{m+1}....x_{n-1} \oplus x_m.x_{m+1}....x_{n-1}$.
$= C_1$
Hence, the additional gates restore value 0 at C_1 during fault free condition. □

Case 5 $|C_i| = 1$, $T_j \in C_i$.

The additional gates with G_i and G_j are determined by *Algorithm* 5:

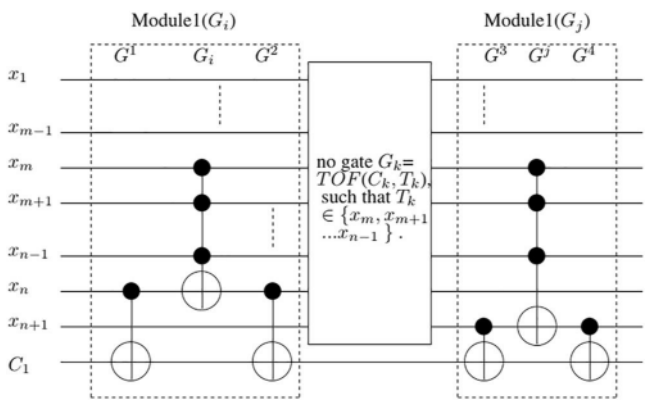

FIGURE 9 *Case 4*

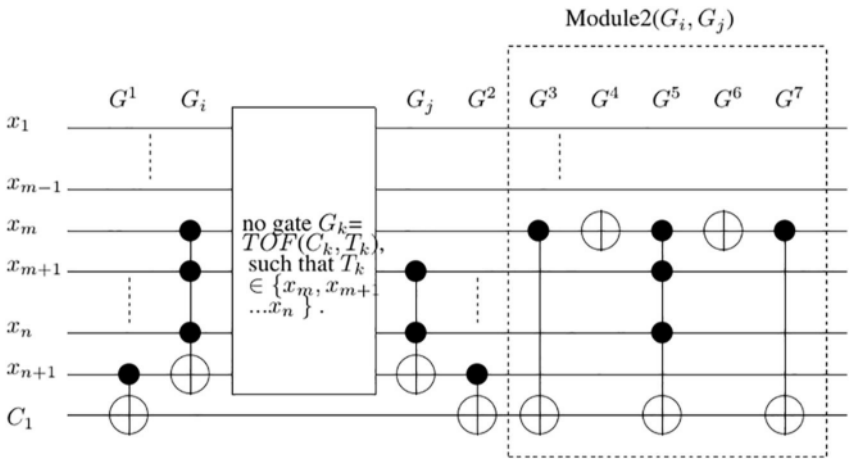

FIGURE 8 *Case 3*

26328925, 2022, 1, Downloaded from https://ietresearch.onlinelibrary.wiley.com/doi/10.1049/qtc2.12035 by S.V. National Institute of Technology, Surat, Wiley Online Library on [02/06/2025]. See the Terms and Conditions (https://onlinelibrary.wiley.com/terms-and-conditions) on Wiley Online Library for rules of use; OA articles are governed by the applicable Creative Commons License

Algorithm 5 Case5(G_i, G_j)

Input: Gate G_i **(TOF(**C_i, T_i**)) and** G_j (TOF(C_j, T_j)) **such that** $|C_i| = 1$, $T_j \in C_i$
Output: Addition of gates G^1, G^2, G^3 **and** G^4 **in the original circuit.**
BEGIN
1. Insert Module1(G^i)
2. Insert G^3 = $TOF(x_m, C_1)$ after gate G_j
2. Insert G^4 = $TOF(x_{m+1}, \ldots, x_n, C_1)$ after gate G^3
END

An example of the pair of gates G_i and G_j satisfying Case 5 with the proposed additional circuitry is shown in Figure 10. The total quantum cost of the additional gates is 3 + Quantum Cost of G^4.

Lemma 5 *In case-5, the additional gates G^1, G^2, G^3, G^4 with gate G_i and G_j as described by Algorithm 6 produce 0 at no fault in the circuit.*

***Proof.*:**
Module1(G_i) produces at C_1: $V(G^2) = C_1 \oplus x_m$.
G_j produces at x_{n+1}: $V(G_j) = x_m \oplus x_{m+1}....x_{n-1}.x_{n+1}$.
G^3 produces at C_1: $V(G^3) \oplus V(G_j)$
G^4 produces at C_1: $V(G^3) \oplus x_{m+1}....x_{n-1}.x_{n+1}$.
$= V(G^2) \oplus V(G_j) \oplus x_{m+1}....x_{n-1}.x_{n+1}$.
$= C_1 \oplus x_m \oplus x_m \oplus x_{m+1}....x_{n-1}.x_{n+1} \oplus x_{m+1}....x_{n-1}.x_{n+1}$.
$= C_1$
Hence the proof.
□

Case 6 For gate G_i, when there exists no G_j satisfying the conditions of cases 1 to 5,

the alternate set of additional gates for G_i is determined by the algorithm shown in *Algorithm* 6:

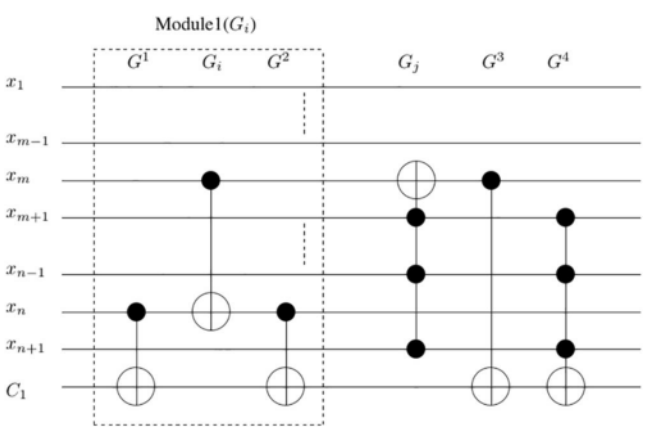

FIGURE 10 *Case 5*

Algorithm 6 Case6 (G_i)

Input: A reversible Gate G_i
Output: Addition of gates G_i^1, G_i^2 and G_i^3 **in the original circuit.**
BEGIN
1. Insert Module1(G^i)
2. Insert G_i^3 = TOF(*Control*(G_i), C_1) after gate G^2
END

An example of gate G_i with the proposed additional circuitry is shown in Figure 11. The total quantum cost of the additional gates is 2 + Quantum Cost of G^i. Only this case is described in Ref. [14].

Lemma 6 *In case 6, the additional gates G^1, G^2 and G^3 with gate G_i and G_j as described by Algorithm 7 produce 0 at no fault in the circuit.*

Proof.:
Module1(G_i) produces at C_1: $V(G^2) = C_1 \oplus x_m....x_n$.
G^3 produces at C_1: $V(G^3) = V(G^2) \oplus x_n....x_{m-1}.x_m$.
$= C_1 \oplus x_m....x_{n-1}.x_n \oplus x_n....x_{m-1}.x_m$.
$= C_1$
Hence the proof. □

Hence in all cases the additional gates restore value 0 at C_1 during fault free condition.

Lemma 7 *If any fault occurs in the circuit, the line at C_1 produces 1.*

Proof A fault in a gate (original or additional) changes the function of the gate, which leads to the change in function of line C_1. The change in function of C_1 produces value 1 for at least 1 input vector. □

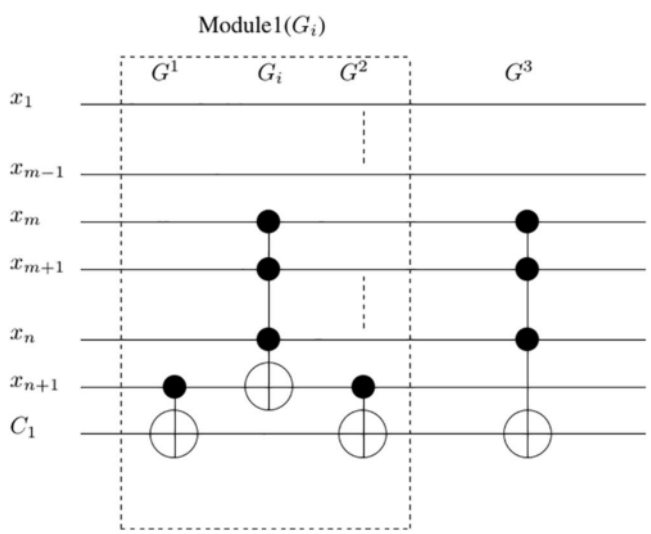

FIGURE 11 *Case 6*

26328925, 2022, 1, Downloaded from https://ietresearch.onlinelibrary.wiley.com/doi/10.1049/qtc2.12035 by S.V. National Institute of Technology, Surat, Wiley Online Library on [02/06/2025]. See the Terms and Conditions (https://onlinelibrary.wiley.com/terms-and-conditions) on Wiley Online Library for rules of use; OA articles are governed by the applicable Creative Commons License

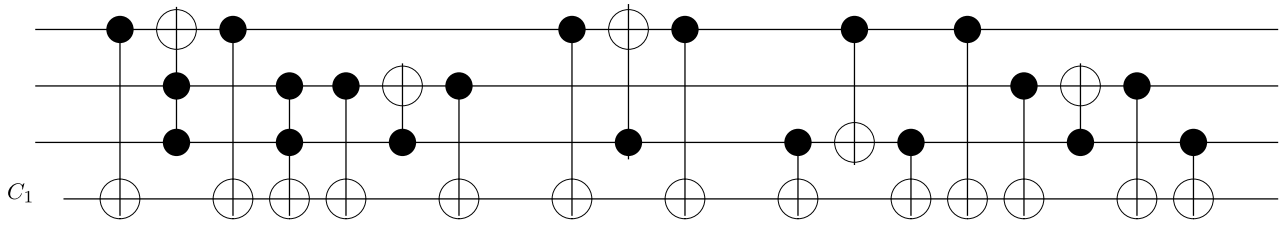

FIGURE 12 Reduction of gates in online testable design for the circuit in Figure 2

TABLE 2 Comparison with Ref. [15, 22]

Circuit	Size	Depth	Quantum cost	Increment in Q_c			% improvement of proposed work With respect to original quantum cost	
				Ref. [22]	Ref. [15]	Our technique	Ref. [22]	Ref. [15]
cycle17_3	20	48	860	981	920	551	50	42.91
cycle10_2_110	12	19	215	288	251	156	61.4	44.19
z4ml_269	11	48	263	330	296	283	17.87	4.94
x2_267	17	38	210	313	261	215	46.67	21.91
squar5_261	13	43	231	310	270	179	56.71	39.4
sqn_258	10	76	510	571	540	418	30	23.9
sao2_257	14	88	1032	1117	1074	544	55.52	51.36
inc_237	16	93	685	782	733	384	58.1	50.95
root_256	13	99	767	846	806	490	46.42	41.2
rd73_252	10	80	436	497	466	436	13.99	6.88
mlp4_245	16	131	1091	1188	1139	729	42.07	37.58
misex1_241	15	55	371	462	416	231	62.26	49.87
radd_250	13	48	282	361	321	282	28.01	13.83
rd53_251	8	27	123	172	147	123	39.84	19.51
ham15_108	13	99	767	846	806	490	45.63	41.2
f2_232	8	19	107	156	131	77	73.83	50.47
dk27_225	18	24	98	207	152	102	107.14	51.02
dk17_224	21	49	419	546	482	298	59.19	43.91
dc2_222	15	75	581	672	626	411	44.92	37.01
dc1_221	11	39	209	276	242	119	75.12	58.85
cu_219	25	40	308	459	383	246	69.16	44.48
5xp1_194	17	85	481	584	532	378	42.83	32.02
cm163a_213	29	39	235	410	322	209	85.53	48.09
cm151a_211	28	33	275	444	359	251	70.18	39.27
cm42a_207	14	35	165	250	207	93	95.15	69.09
clip_206	14	174	1476	1561	1518	869	46.88	43.97
alpa_203	22	80	886	1019	952	357	74.72	67.16
adr4_197	13	55	315	394	354	320	23.49	10.8
Average			478.5	572.93	525.21	330.03	50.76	40.78

26328925, 2022, 1, Downloaded from https://ietresearch.onlinelibrary.wiley.com/doi/10.1049/qtc2.12035 by S.V. National Institute of Technology, Surat, Wiley Online Library on [02/06/2025]. See the Terms and Conditions (https://onlinelibrary.wiley.com/terms-and-conditions) on Wiley Online Library for rules of use; OA articles are governed by the applicable Creative Commons License

TABLE 3 Comparison with Ref. [16]

Circuit	Size	Depth	Quantum cost	Increment in Q_c	
				Our technique	Ref. [16]
2of5d1	6	18	124	160	84
3_17_tc	3	6	14	26	34
4_49d1	4	16	62	75	74
9sym2	12	28	108	157	213
cm82a_208	8	22	124	158	316
con1_216	9	21	167	167	428
ex2_227	6	13	106	132	269
ham3tc	3	5	9	19	22
ham7tc	7	23	87	132	112
hwb4d1	4	17	67	98	56
Majority	6	8	90	106	253
mod5adder1	6	21	109	151	178
mod5adder2	6	15	87	117	166
mod5d1	5	8	24	40	147
*n*th_prime3	3	4	8	16	20
*n*th_prime4_inc_d1	4	12	62	84	82
*n*th_prime4_inc_d2	4	11	57	79	76
rd53d1	7	30	199	259	93
rd53d2	7	12	104	124	144
rd84d1	15	28	112	161	233
sym6	10	20	72	102	150
xor5d1	5	4	4	12	18

Example 1 The modified design for the circuit in Figure 2 is shown in Figure 12. In Figure 12, case 5 has been followed for the second and third gate. All other gates are following the case 6.

4 | EXPERIMENTAL RESULTS

We have tested several reversible benchmark circuits, the results of which are shown in Table 2. The table compares the proposed design with the work in Ref. [15, 22] with respect to quantum cost overhead. The first four columns of the table contain the circuit name, size, the depth and quantum cost of the corresponding circuits. The next three columns compare the proposed design and the design-for testability technique in Ref. [15, 22] with respect to the original quantum cost. The last two columns represent the improvement of the proposed design in comparison with Ref. [15, 22]. From the table, it can be seen that the proposed design incurs less quantum cost as compared to the approach in Ref. [15, 22]. On an average, our design overhead is 50.76% and 40.78% better with respect to Ref. [15, 22], respectively.

We have also compared our design with the most recent Design for Testability work [16] in Table 3. The first four columns in Table 3 show the circuit name, size, depth and quantum cost. The next two columns compare the quantum cost overhead of our design with Ref. [16]. From the table, it can be seen that our design gives better result in most of the cases.

5 | CONCLUSION

We proposed an online testing technique for reversible circuits. Given a reversible circuit, we append some additional gates to make the circuit online testable. This addition of circuitry varies from case to case. If any fault occurs in the circuit, changing the target value of any gate, it causes the manifestation of changes of value at control line from 0 to 1. Our design outperforms previous studies with respect to the quantum cost. The reason for our better result is that the additional gates appended to achieve testability in our design is based on the searching of some pattern of gates in the circuits, whereas in other cases, the designs are universal, that is, those do not

26328925, 2022, 1, Downloaded from https://ietresearch.onlinelibrary.wiley.com/doi/10.1049/qtc2.12035 by S.V. National Institute of Technology, Surat, Wiley Online Library on [02/06/2025]. See the Terms and Conditions (https://onlinelibrary.wiley.com/terms-and-conditions) on Wiley Online Library for rules of use; OA articles are governed by the applicable Creative Commons License

depend on any particular structure. Our results show that these patterns as described in six cases in the paper are more likely to occur in the structure of the circuits.

We have discussed our study with respect to several studies on reversible testing existing presently in the literature. However, with the advent of Physical Quantum Computer (e.g. IBM QX machine [39]), the entire research on reversible logic synthesis and testing is shifting. Thus, it demands an entire new approach for fault modelling as well as testing, which may be our possible future area of work.

CONFLICT OF INTEREST

We have no conflict of interest to disclose.

DATA AVAILABILITY STATEMENT

My manuscript has no associated data. http://www.informatik.uni-bremen.de/rev_lib/

ORCID

Joyati Mondal https://orcid.org/0000-0003-2029-132X

REFERENCES

1. Landauer, R.: Irreversibility and heat generation in the computing process. IBM J. Res. Dev. 5, 183–191 (1961)
2. Bennett, C.H.: Logical reversibility of computation. IBM J. Res. Dev. 17, 525–532 (1973)
3. Feynman, R.P.: Feynman Lectures on Computation. Addison-Wesley (1996)
4. Nielsen, M., Chuang, I.: Quantum Computation and Quantum Information. Cambridge University Press (2000)
5. Gershenfeld, N., Chuang, I.L.: Quantum computing with moleculas. Proc. of Scientific American (1998)
6. Feynman, R.: Quantum mechanical computers. Opt News. 11(2), 11–20 (1985)
7. Toffoli, T.: Reversible computing. In: Technical memo mit/lcs/tm-151. MIT Lab for Computer Science (1980)
8. Fredkin, E., Toffoli, T.: Conservative logic. Int. J. Theor. Phys. 21, 219–253 (2015)
9. Hayes, J.P., Polian, I., Becker, B.: Testing for missing-gate faults in reversible circuits. In: Proceedings of Asian Test Symposium, pp. 100–105. ATS 2004 (2004)
10. Rahaman, H., et al.: On the detection of missing-gate faults in reversible circuits by a universal test set. Proceedings of International Conference on VLSI Design, pp. 163–168. (2008)
11. Polian, I., et al.: A family of logical fault models for reversible circuits. In: Proceedings of Asian Test Symposium, pp. 422–427. (2005)
12. Polian, I., et al.: Advanced modeling of faults in reversible circuits. In: Proceedings of 8th East-West Design and Test Symposium, pp. 376–381. EWDTS 2010 (2010)
13. Gaur, H.M., et al.: Fault models and test approaches in reversible logic circuits. In: Design and Testing of Reversible Logic, pp. 153–167. (2020)
14. Kole, D.K., et al.: Synthesis of online testable reversible circuit. In: Proceedings of 13th IEEE International Symposium on Design and Diagnostics of Electronic Circuits and Systems, pp. 277–280. (2010)
15. Gaur, H.M., Singh, A.K.: Design of reversible circuits with high testability. Electron. Lett. 52, 1102–1104 (2016)
16. Gaur, H.M., et al.: Design of single-bit fault-tolerant reversible circuits. IEEE Des. Test. 38(2), 89–96 (2021)
17. Gaur, H.M., et al.: Computational analysis and comparison of reversible gates for design and test of logic circuits. Int. J. Electron. 106(11), 1679–1693 (2019)
18. Gaur, H.M., Singh, A.K., Ghanekar, U.: Design of reversible arithmetic logic unit with built-in testability. IEEE Des. Test. 36(5), 54–61 (2019)
19. Gaur, H.M., Singh, A.K., Ghanekar, U.: Fault detection in multiple controlled fredkin circuits. IET Circuits, Devices Syst. 13(5), 723–729 (2019)
20. Gaur, H.M., Singh, A.K., Ghanekar, U.: Testable design of reversible circuits using parity preserving gates. IEEE Des. Test. 35(4), 56–64 (Aug 2018)
21. Gaur, H.M., Singh, A.K., Ghanekar, U.: Testable designs of toffoli fredkin reversible gates. arXiv:2108.07448v1 [cs.AR] (2021)
22. Hasan, H.M., Solaiman, M., Biswas, A.K.: Efficient techniques for fault detection and correction of reversible circuits. J. Electron. Test. 33, 591–605 (2017)
23. Mondal, B., et al.: An online testing scheme for detection of gate faults in esop-based reversible circuit. J. Inst. Eng. 100, 309–319 (2019)
24. Gaur, H.M., Singh, A.K., Ghanekar, U.: A review on online testability for reversible logic. In: 4th International Conference on Eco-friendly Computing and Communication Systems, pp. 384–391. (2016)
25. Sen, B., Das, J., Sikdar, B.K.: A dft methodology targerting online testing of reversible circuit. In: IEEE International Conference on Devices, Circuits and System, 689–693 (2012)
26. Nashiry, Md.A., Bhaskar, G.G., Rice, J.E.: Online testing for three fault models in reversible circuits. In: Proceedings of ISMVL. IEEE Computer Society (2015)
27. Mahammad, S.K.N., Veezhinathan, K.: Constructing online testable circuits using reversible logic. IEEE Trans. Instrum. Meas. 59, 101–109 (2010)
28. Nayeem, N.M., Rice, J.E.: A sinple approach for designing testable reversible circuits. In: Proceedings of IEEE Pacific Rim Conference on Communications And Signal Processing, pp. 85–90. IEEE Computer Society (2011)
29. Nayeem, N.M., Rice, J.E.: Online fault detection in reversible logic. In: Proceedings of IEEE Symposium Defect and Fault Tolerance in VLSI and Nanotechnology Systems, pp. 426–434. IEEE Computer Society (2011)
30. Nayeem, N.M., Rice, J.E.: Constructing online testable circuits using reversible logic. Online Testable Approaches in Reversible Logic. 29, 763–778 (2013)
31. Hawash, A., Awad, A., Abdalhaq, B.: Reversible circuit synthesis time reduction based on subtree-circuit mapping. Appl. Sci. 10(12), 4147 (2020)
32. Mondal, J., et al.: Boolean difference technique for detecting all missing-gate faults in reversible circuits. In: Proceedings of DDECS, 95–98 (2015)
33. Mondal, J., et al.: Boolean difference technique for detecting all missing-gate and stuck-at faults in reversible circuits. J. Circ. Syst. Comput. 28(12), 1950212:1–1950212:18 (2019)
34. Mondal, J., Deb, A., Das, D.K.: An efficient design for testability, approach of reversible logic circuits. J. Circ. Syst. Comput. 30(6), 2150094:1–2150094:31 (2021)
35. Vasudevan, D.P., Lala, P.K., Parkerson, J.P.: A novel approach for on-line testable reversible circuit designs. In: Proceedings of Asian Test Symposium (2004)
36. Biswal, L., Rahaman, H., Maity, N.P.: Clifford+t-based implementation of fault-tolerant quantum circuits over xor-majority graph. Microelectron. J. 116 (2021)
37. Biswal, L., Mondal, B., Rahaman, H.: Fault-tolerant quantum implementation of conventional decoder logic with enable input. IET Circuits, Devices Syst. 15(5), 415–423 (2021)
38. Michael Miller, D., Wille, R., Sasanian, Z.: Elementary quantum gate realizations for multiple-control toffoli gates. In: Proceedings of ISMVL, pp. 288–293. IEEE Computer Society (2011)
39. IBM QX machine. https://www.ibm.com/quantum-computing

How to cite this article: Mondal, J., Das, D.K.: A new online testing technique for reversible circuits. IET Quant. Comm. 3(1), 50–59 (2022). https://doi.org/10.1049/qtc2.12035

26328925, 2022, 1, Downloaded from https://ietresearch.onlinelibrary.wiley.com/doi/10.1049/qtc2.12035 by S.V. National Institute of Technology, Surat, Wiley Online Library on [02/06/2025]. See the Terms and Conditions (https://onlinelibrary.wiley.com/terms-and-conditions) on Wiley Online Library for rules of use; OA articles are governed by the applicable Creative Commons License